- In the counter based on the CsI(pure) crystal, WLS plate and APD(s) (Hamamatsu S8664-55), the statistical noise, ~√F (F – excess noise factor of APD), provides notable contribution to the evaluated energy resolution at the energies E_γ < 0.3 GeV.

- It is important to measure spectral characteristics of APD: gain(λ), F(λ) (especially for λ = 588 nm: NOL-9).

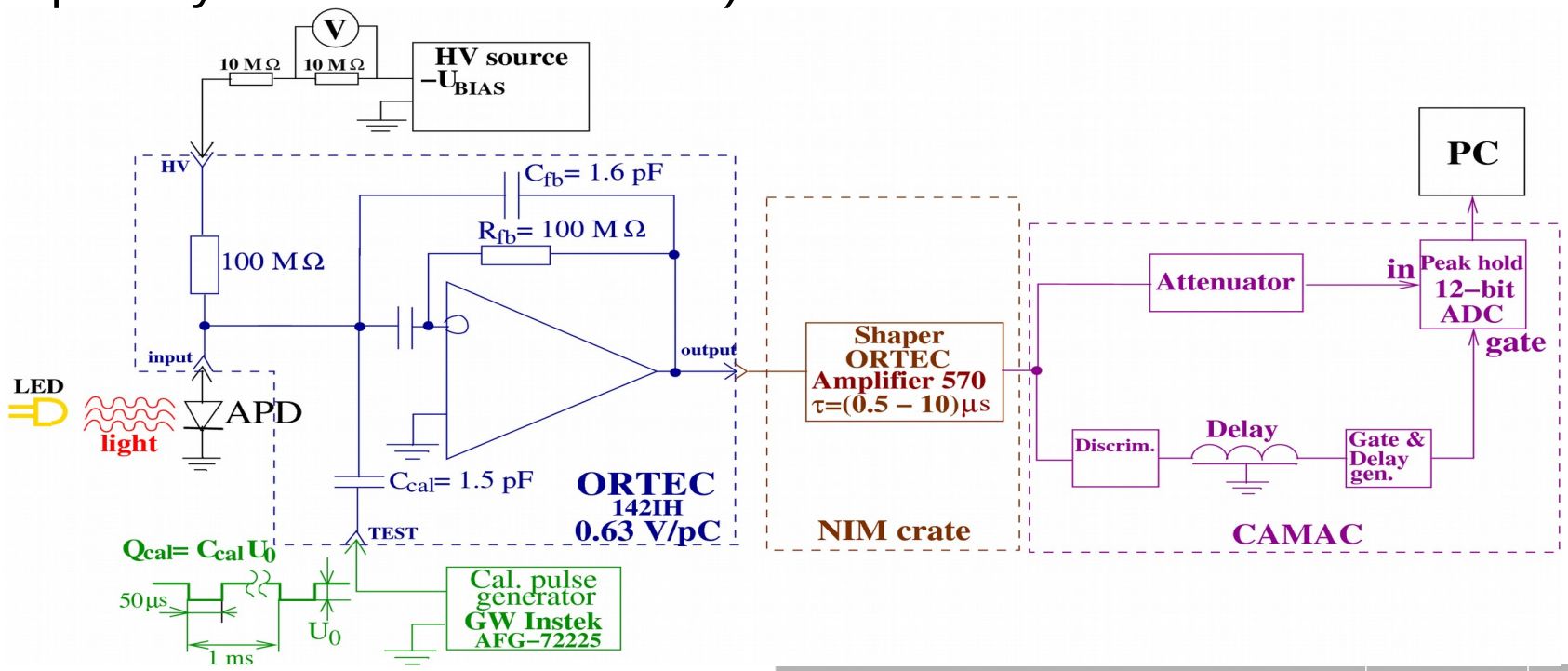

$$G(U_{BIAS}) = \frac{I_{light}(U_{BIAS}) - I_{dark}(U_{BIAS})}{I_{light}(10V) - I_{dark}(10V)} = \frac{I_{photo}(U_{BIAS})}{I_{photo}(10V)}$$

The RMS of the peak in the amplitude spectrum of the calibration signal is a measure of the equivalent noise charge (ENC) in the scheme with APD.

LED type	U, V	λ, nm
RED: ARL-3214URC-6cd	1.9 – 2.3	620 – 635
ORANGE: ARL-3214UYC-6cd	1.9 – 2.3	580 – 595
GREEN: ARL-3214PGC-6cd	2.9 – 3.3	520 – 530
BLUE-GREEN: ARL-3214BGC-15cd	2.9 – 3.3	495 – 510
BLUE: ARL-3214UGC-6cd	2.9 – 3.3	460 – 470
UV: L-7104UVC	3.9 – 4.2	385 – 405